TRADE KRAISSL MARK
INDUSTRIAL

KRAISSL QUARTERLY

Published By
THE KRAISSL COMPANY
INCORPORATED
PUMPS-SEPARATORS-ENGINEERING EQUIPMENT
HACKENSACK, NEW JERSEY

TRADE KRAISSL MARK
MARINE

Volume 20 April 1977 Number 2

WE MUST PARTICIPATE IN RUNNING THE COUNTRY

FREDERICK KRAISSL, JR., P.E.
Chairman
The Kraissl Company, Inc.

It has been said with some justification that people get the kind of government they deserve. This, like other pat remarks is only true if people have the opportunity to make their desires known, and use this privilege. We do, in this country so it still applies to us. Peoples dominated by autocracies usually do not, as the oppressors have all the guns to keep their slaves in submission. In spite of this, some oppressor governments that do not represent the will of the people have been toppled, but it is not an easy route and usually entails much bloodshed and economic dislocation.

CONSULTING ENGINEER
KRAISSL ASSOCIATES

That is what I do not like about a so called volunteer military force, as I cannot differentiate between such a force and the mercenaries like the Hessian Army imported by Britain from Germany to fight our colonial soldiers in the American War for Freedom and Independence celebrated by our recent Bicentennial. Our former military policy precluded this, as it was organized around an army of civilians in time of War. The regular army was the nucleus of trained specialists in military tactics, with the capability of dealing with small brush fire operations, and the function of training the civilian components. Then came the National Guard, which is an organization of civilians with military training based on the minute man philosophy of dropping the plow share and picking up the rifle when the security of the country or state was threatened. This was the second line of defense. Lastly there was, and is, the organized Reserve, a complete civilian army potential called to duty in time of war. This is probably in better training than ever before, as it appears that trained personnel go immediately into the Reserve when their tour of duty has been completed.

What, in my opinion, we need is more National Guard and Reserve components with less so called Volunteer or Mercenary Army. We could afford to boost the compensation of the National Guard and Reserve to recruit these components to a much greater strength without the danger of having them used as an enforcement agency on our civilian population! A Mercenary Military Force does not usually differentiate concerning who gives the orders as long as it is well paid and the orders come through recognized channels, as exemplified by the Hessian Army. A Civilian Military Force is **us.** Usually one does not fight against **oneself.** A Civilian Military Force is usually inspired by patriotic zeal to preclude conquest by some other nation. With the discussion of unionism within the Mercenary Military Force, who knows where this would lead or to what leadership it would respond? Consequently the reduction of the Mercenary Force and the increase in the Civilian Military Force would appear to abate this inherent danger to freedom. We have some parallel in the military procedure of the Swiss Government. Each individual who is part of the Civilian Military Force has his uniform and personal arms in his place of residence, and can respond with full equipment on very short notice. There need not be too much training to keep military units competent. Strategy and tactics are supplied by the regular military nucleus. This is the kind of defensive military establishment a peace loving country needs. The ability to respond instantly when required, but not to engage in a war of aggression. In the meantime peaceful purposes of supplying production and needed services build the health and prosperity of the nation without carrying the burden of a huge mercenary military establishment.

The most logical procedure is for a country like ours, which was founded on a constitution that has been praised as the most enlightened document to free and govern mankind, is to hold on to what we have before it is taken from us. Why people should be willing to lead others into slavery by wiles or belief is hard to understand. Freedom should be regarded as the most precious asset we have. However, we know that there is evidence of subversive activity and we have occasionally published the Communist Rules for Revolution to warn our people of intent and let them judge how far we have been led down this path to destruction.

The purpose of this discussion is to show what can be done about it. As businessmen, we are familiar with the role of Directors and their responsibility to the stockholders. To simplify essential governmental concepts let's define our citizens as stockholders in the United States of America, and let's regard our Congressmen, including both Senators and Representatives, as the Directors. We elect them, as do stockholders, company directors. Most of the other procedures applying to corporate directors apply to our Representatives. My experience has been that our Representatives want to know the opinions and wishes of those they represent. They are bound to be influenced by those they hear from, and if the opinions they receive are one-sided, who is really to blame?

We are supposed to be, as a nation of businessmen, dedicated to the principles of free enterprise, the greatest salesmen on earth. Why do we not use our talents? Advertising products and services is only valid if the free enterprise system is perpetuated. Consequently this should be the first priority.

We have found that the best approach is a House Organ, such as this publication. I am not a young man, having organized this company over fifty years ago, but I still travel about the country to occasionally visit our sales representatives, and other customers where I can be useful. I do not believe that the intent is to flatter, as there is no reluctance to tell it as it is when customers are unhappy about anything, so I take as an expression of sincerity the initial remark that I frequently am greeted with, "We read your editorials first and then look at the part that covers news of Kraissl Products and procedures." This tells me our house organ is doing the job for which it was originated. People and organizations on our circulation list do not always agree with us concerning our editorials, and that is as it should be, but they are unanimous in

their commendation for our belief that business should have a voice in public affairs.

Frequently we are asked for permission to reproduce articles and of course we agree, and state that is why our articles are not copyrighted, so they can be reproduced in whole or in part, as long as they are used in such a way that we are not misquoted. Other times we have pleasant discussions documenting the basis for some of our opinions.

We are telling you this because if it works for us, as a small company, it can work for others, who are interested in our country and perpetuating our way of life. Congressmen can be put on mailing lists, and they will painlessly know the opinions of at least one group. The companies on our mailing list, as well as individuals, will also know our opinions, and many can and have chosen to write their Congressmen stating their opinions on the matters we have discussed.

The House Organ should be originated within the organization of each company to give it the obvious note of sincerity that must exist if there is to be any useful influence. I was unusually complimented by the visit of the president of a midwestern company with whom we do not have any important business relations. He stopped in and introduced himself stating that he wanted to meet the man who wrote the editorials ascribed to me. I had been out in the shop, which usually adds some spots to my clothes, so I told him I didn't mind if he did not, but if he stopped in again to please let me know, so that I could properly do the honors.

I am convinced that the House Organ Route is very effective, and is probably the best thing we do in overall communication. I hope you will join us in presenting editorials, which among other things, will contribute the voice of your business in public affairs.

EDITORIALS

Our editors are the senior officers of this company and our policy permits each of us to express thoughts which we believe can be contributions to the voice of public opinion in business.

We want this publication to be available when you are able to invite us to exchange current ideas, information and technical data without intrusion.

VACATION NOTICE

The Vacation Period, while never painless, was found least disturbing last year when arranged for the last week in July and first week of August. We are scheduling complete shut down during this period.

EXTENDED LIFTING JACK AND VALVE STEM FOR REMOTE VALVE OPERATION

A rather unusual requirement for our duplex three-way transfer valves developed for the North Sea Mobil platforms built by Curtiss Wright Corporation, Wood-Ridge, New Jersey.

The valves furnished with lifting jacks had to be operable through an acoustically sealed partition. Rather than consider a more comlicated remote control mechanism, which would have to facilitate lifting the valve plug, turning the plug, and finally reseating the plug, it was decided to extend the lifting jack mechanism together with an extended valve stem and operate the valve manually through a hole in the steel partition of the platform. A circular plate the size of this hole was built right into the valve to complete the seal after installation. Full operation of the valve, including that of the lifting jack, was thereby possible from a position outside of the acoustically sealed compartment containing the valve and other equipment. This modification is typical of what we can furnish for specified applications.

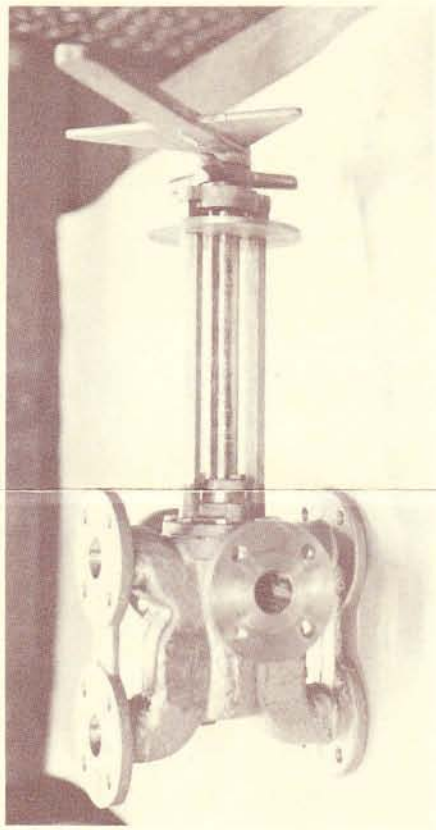

DELIVERIES ON KRAISSL PRODUCTS

Thank you for your tolerance during the worst of the casting shortage. Cast Iron is back on reasonable deliveries. Steel is very much improved. Some items are immediately available. Please tell us your delivery requirements. We will try to comply.

TROUBLE PROOFING KRAISSL CLASS 72 STEEL VALVES

U. S. PATENT No. 3567181

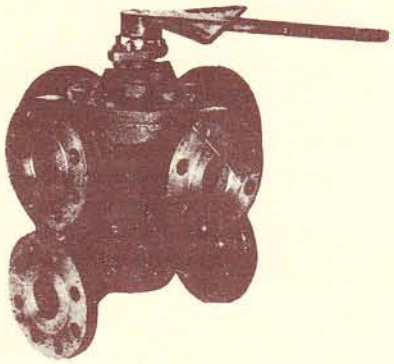

We know that a term frequently used is "Fool proofing" but we have never liked it as it does not include conditions not easily controlled by anyone, regardless of their training or intelligence. The first matter of trouble proofing relates to U. S. Patent No. 3,567,181 under which we are licensed to manufacture. It is hoped that the illustration shown is in sufficient detail to be understandable. The need for this development was caused by the experience of a customer with a COMPETITIVE valve. It seems this was dismantled for service and inspection but was reassembled incorrectly. Instead of sending lubricating oil to locations requiring it, the lubrication was shut off and a multi-thousand dollar installation was destroyed. The customer that had the experience is satisfied with our solution to preclude this potential hazard and all of our customers benefit.

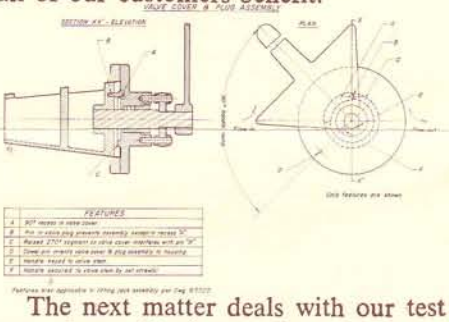

The next matter deals with our test procedure. All of our valves are tested by hydraulic pressure at working pressure plus fifty percent, in accordance with standard test procedure. In spite of this some valves were found to leak after they had left our plant. While this is difficult to explain, we have taken the position of making provision to preclude this occurrence. Consequently the basic hydraulic test has been augmented as follows:

1. After a steel housing casting has been sufficiently machined to permit the assembly of closure plates, it is submerged and tested under water by an inert gas such as air or nitrogen at

pressures in the vicinity of 280 Pounds psig, where valves are of a size where submergence can be accommodated.

2. Those that show no signs of bubbles emerging from the casting are continued with machine operations to a conclusion and are assembled and tested by the usual hydraulic pressure test of working pressure plus fifty percent.

3. Those that pass this test are next tested by air, using the soapy water test, to determine whether anything has opened up under the hydraulic test, that could cause minor leaks, not detectable by the hydraulic test.

Many consider the soapy water test as good or better than any other. In the case of valves going to our customers, both tests have been successfully passed, except the very large ones where we are forced to rely on the soapy water test, which so far has proved satisfactory. To determine tiny leaks requires expert observation and we expect our inspection personnel to have this capability. However our procedure provides double inspection with inert gas under pressure with two separate tests before and after the hydraulic test, both of which are accepted as conclusive.

We just thought you would like to know the extent to which we go to supply our steel valves which should provide trouble free service under proper usage in the field.

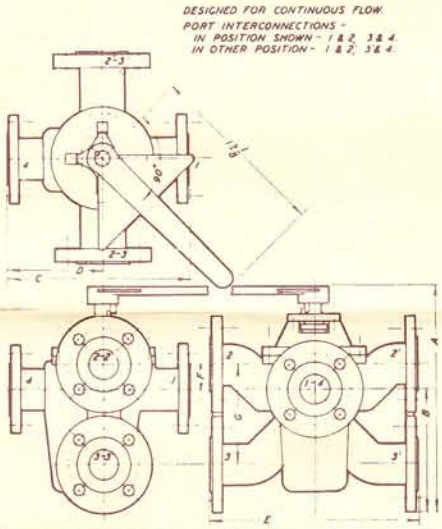

TABLE OF DIMENSIONS - INCHES

MODEL	SIZE	FLG. DIA	B.C. DIA	NO. BOLT HOLES	BOLT HOLE DIA.	R.F. DIA.	MIN. APPX. FLG. WGT. LBS.	A	B	C -1/8 -0	D	E -1/8 -0	F	G
150# ASA FLANGES - 230 PSIG. MAX. W.P.														
72-37 AAFS	1 1/2	5	3 7/8	4	5/8	2 7/8	1/2	70	14 1/2	7 7/8	9 3/8	4 15/16	10	1 6 3/8
72-39 AAFS	2	6	4 3/4	4	3/4	3 5/8	9/16	100	16 3/8	9 5/16	12	6 1/4	12	7/16 6 3/4
72-41 AAFS	2 1/2	7	5 1/2	4	3/4	4 1/8	5/8		17 1/8	10 13/16	12 5/8	6 1/2	13	7/16 7 3/4
72-43 AAFS	3	7 1/2	6	4	3/4	5	11/16		18 7/16	11 3/8	12 1/2	6 7/8	14	1/8 7 3/4
72-47 AAFS	4	9	7 1/2	8	3/4	6 3/16	7/8	305	19 3/4	12 1/16	15 5/8	9	21	2 11/16 10 1/4
300# ASA FLANGES - 600 PSIG. MAX. W.P.														
72-37 AAFHS	1 1/2	6 1/8	4 1/2	4	7/8	2 7/8	3/4	90	15 1/16	8 7/16	9 3/8	4 15/16	10	1 6 3/8
72-39 AAFHS	2	6 1/2	5	8	3/4	3 5/8	13/16	115	16 5/8	9 9/16	12	6 1/4	12	7/16 6 3/4
72-41 AAFHS	2 1/2	7 1/2	5 7/8	8	7/8	4 1/8	15/16		18 1/8	11 1/16	12 5/8	6 1/2	13	7/16 7 3/4
72-43 AAFHS	3	8 1/4	6 5/8	8	7/8	5	1 1/16	185	17 1/8	10 1/16	12 1/2	6 7/8	18	2 3/16 8 1/4
72-47 AAFHS	4	10	7 7/8	8	7/8	6 3/16	1 1/8	355	20 3/4	12 9/16	15 5/8	9	21	2 11/16 10 1/4
600# ASA FLANGES - 1200 PSIG. MAX. W.P. (300°F. MAX. TEMP.)														
72-33AA FHS-600	1	4 3/8	3 1/2	4	1/2	2	11/16		15 1/8	8 1/2	10 3/8	5 5/8	11	5/16 6 3/8
72-37AA FHS-600	1 1/2	6 1/8	4 1/2	4	7/8	2 7/8	7/8		15 3/4	9 1/8	10 3/8	5 5/8	11	3/16 6 3/8

* PLUS 1/16 R.F. ON 150# & 300# FLGS. & 1/4 R.F. ON 600# FLGS.

THE VERSATILE CLASS 73 SEPARATORS

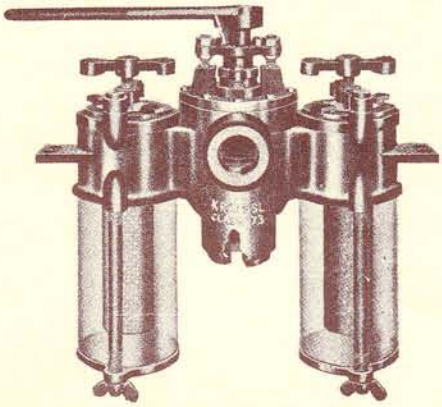

As most of our customers know, this line of separators is known by our Trade Marked Sea-View designation. This originated from the first application, which was to preclude or minimize debris from the sea getting into cooling water pumps, or heat exchangers with engine cooling systems. The bodies of these separators are fabricated from tubes of transparent plastic, so the sea in the interior may be viewed. If a lot of debris has accumulated, it is time for a cleaning job, and if not, the passing inspection is all that is necessary.

Optional flow with these units makes them very versatile. If external flow is specified, the debris is collected on the outside of the separator element, and is easily seen. In this case, the loosening of the two wing-nuts permits dropping the body, and cleaning is from the exterior. If internal flow is employed, the use of a flashlight will tell whether the interior of the basket is filled with debris, in which case it can be lifted out for dumping and cleaning.

EASE OF CLEANING

SINGLE AND DUPLEX

SEPARATOR ELEMENTS REMOVABLE FROM TOP FOR CLEANING

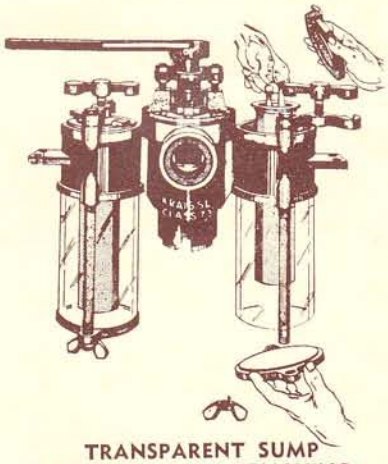

TRANSPARENT SUMP ACCESSIBLE BY REMOVING TWO WING NUTS

The Class 73 separators can be supplied with fine mesh filter baskets, which should make them ideal for well water systems. When wells are sunk into a rock acquifier, some of the rock can be picked up by the suction of the pump. Water is supplied to plumbing fixtures, which can be jammed up by extraneous matter. Also, rock sections and particles do a pump no good.

The versatility does not stop here. Where visibility is not needed, the transparent plastic body can be replaced by a dimensional equivalent brass or steel pipe. For original marine service, the metal castings were made from bronze. We now have corrosion resisting aluminum alloy castings, that can compete favorably with the price of iron castings; a little higher, but not comparable with bronze.

Another versatility is the length of the body. If straining area is not too critical, and there is a vertical space problem the body length can be modified to accommodate in most cases. If separating area is important or critical, the lost area can probably be replaced by the use of our patented multi-element baskets.

In any event, designers can profitably look at our Class 73 Sea View line to determine whether this has advantages for many applications.

While single separators meet most requirements for intermittent service, where the system can be shut down to clean the separator elements, or substitute fresh ones, there are many applications where continuous operation must be maintained. For this purpose, this series has its duplex counterpart. Again, body visibility may be important, and when this is not, our standard Class 72 series may be the best choice. However, it should be emphasized that one of the costly features of both of these duplex lines is that the internal channels are designed to have a non-constricting flow effect, as related to the nominal pipe size. This makes necessary much larger internal porting through the valve center section, than might be supplied if constricted flow were acceptable. In most cases, constricted flow is not acceptable, and engineering specifications frequently emphasize maximum acceptable pressure drop. However, this specification is usually not easily checked for compliance unless pressure drop tests are made. This should be an important consideration when specifications are written, but an easy check for restricted flow is to disassemble a unit, and make a quick estimation of whether the ports through the body and plug are roughly equivalent to the area of the nominal port size. Some small variation may not greatly increase pressure drop, but if a unit with a nominal port size of

two inches had internal channels reduced so that liquid flow was forced through a 1½" area in the plug, there would be restriction to flow. Such simple inspection tests could easily determine suitability for a specific application and when minimum restriction is desired, would explain the justification for the increased cost of internal construction that meets this requirement.

CLASS 73 SERIES SINGLE SEPARATORS SIZES AND DIMENSIONS

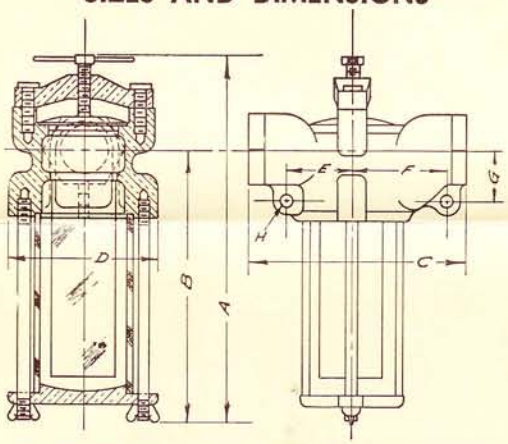

MODEL	NPT	A	B	C	D	E	F	G	H
73-4	1/2	7 3/8	4 7/8	4	3 3/4	1 1/2	2	7/8	9/64
73-6	3/4	9 3/8	6 7/8	5 1/2	3 3/4	1 3/4	2 3/8	1 1/4	11/32
73-8	1	9 3/8	6 7/8	5 1/2	3 3/4	1 3/4	2 3/8	1 1/4	11/32
73-10	1 1/4	11 3/4	7 13/16	7	5	2	3	1 7/8	7/16
73-12	1 1/2	13 5/8	9 11/16	7	5	2	3	1 7/8	7/16
73-14	2	15 1/8	10 7/16	9 3/4	5 7/8	2 5/8	4 1/4	2 1/4	9/16
73-16	2 1/2	18 3/8	13 5/16	9 3/4	5 7/8	2 5/8	4 1/4	2 1/4	9/16

51st ANNIVERSARY

SALES REPRESENTATION

HOME OFFICE

We have reserved the areas of Connecticut, Metropolitan New York, including the Hudson Valley, Long Island, New Jersey and eastern Pennsylvania less Philadelphia District for coverage by Kraissl Company personnel.

Northeast Region

Boston-Cooper Corp.
95 Holland Street
West Somerville, Mass. 02144

Capt. C V. Watson
Maiden Cove Lane
Cape Elizabeth, Maine 04107

Eastern Region

Filtration Unlimited
Buffalo & John Streets
Akron, N. Y. 14001

R. C. White Co.
3065 Enterprise Blvd.
Bethel Park, Pa. 15102

Gelman Industrial Equipment
1327 Barton Drive
Fort Washington, Pa. 19034

Jobe & Co., Inc.
2857 Greenmount Ave.
Baltimore, Md. 21218

Southeast Region

Power Equipment Co.
1307 West Main St.
Richmond, Va. 23201

Dillon Supply Company — Main Office
Raleigh, N. C. 27602

Dillon Supply Company
Durham, No. Carolina 27702

Dillon Supply Company
Rocky Mt., No. Carolina 27801

Dillon Supply Company
Goldsboro, No. Carolina 27530

Dillon Supply Company
Charlotte, No. Carolina 28201

Boiler Supply Company, Inc.
490 Craighead Street
Nashville, Tenn. 37204
601 Van St., N. W.
Knoxville, Tenn. 37921

Applied Engineering Co., Inc.
P. O. Box 506, Orangeburg, S. C. 29115

Spotswood Parker & Co.
721 Miami Cir. NE, Atlanta, Ga. 30324

Florida Filters, Inc.
5570 N. E. 4th Ave., Miami, Fla. 33137

Procter & Co.
Box 26158
Birmingham, Ala. 35226

North Central Region

Comb & Groves, Inc.
336 W. Eight Mile Rd.
Ferndale, Mich. 48220

Hetler Equipment Co.
P. O. Box 1904
Grand Rapids, Mich. 49501

Central Region

M. Huffman Sales Co.
42 No. Westwood
Toledo, Ohio 43607

W. G. Taylor Co.
1900 Euclid Bldg., Cleveland, Ohio 44115

The Jordan Engineering Co.
P. O. Box 30071
Cincinnati, Ohio 45230

T. A. Heidenreich Co., Inc.
2525 E. 54th Street
Indianapolis, Ind. 46220

Tobra Engineering Co.
5438 Milwaukee Ave.
Chicago, Illinois 60630

A. K Howell Co.
2683 S. Big Bend Blvd.
St. Louis, Mo. 63143

South Central Region

Creole Engineering Co.
P. O. Box 23159, Harahan, La. 70183

Jack Tyler Engineering Co.
6112 Patterson Ave.
Little Rock, Ark. 72209

Albert Sterling & Assoc., Inc.
2611 Crocker St., Houston, Texas 77006

Northwest Region

Baxter-Rutherford Inc.
P. O. Box 24324 Terminal Annex
Seattle, Washington 98134

Western Region

Jay Besore & Assoc.
1690 Plymouth St.
Mountain View, Cal. 94043

Power Engineering Co.
364 W. North 600th St.
Salt Lake City, Utah 84110

Southwest Region

Wagner Hydraulic Equip. Co.
2089 Westwood Blvd.
Los Angeles, California 90025

Engineered Sales Co.
5150 N. 16th St., Suite A-126
Phoenix, Arizona 85016

Canada—Ontario and Quebec Provinces

Kirk Equipment Ltd.
375 Victoria Ave.
Montreal, Quebec, Canada H3Z 2N1

K. C. Hamilton Equip. Ltd. — Marine
4100 W. Hill Ave.
Montreal, Quebec, Canada

Canada—British Columbia Province

Fred McMeans & Co.
1960 Waterloo St. 103
Vancouver, B. C., Canada

Canada—Alberta Province

H. F. Clarke Limited
5220-1A Street S. E.
Calgary, Alberta, Canada

Hawaii

Foster Equipment Co.
719 Ahua St.
Honolulu, Hawaii 96803

Mexico

Ingenieria Termo Industrial, S. A.
Apartado 20-360
Mexico 20, D. F., Mexico

THE KRAISSL COMPANY
INCORPORATED
HACKENSACK, NEW JERSEY 07601
RETURN POSTAGE GUARANTEED

TRADE KRAISSL MARK

YOUR COPY OF

KRAISSL QUARTERLY